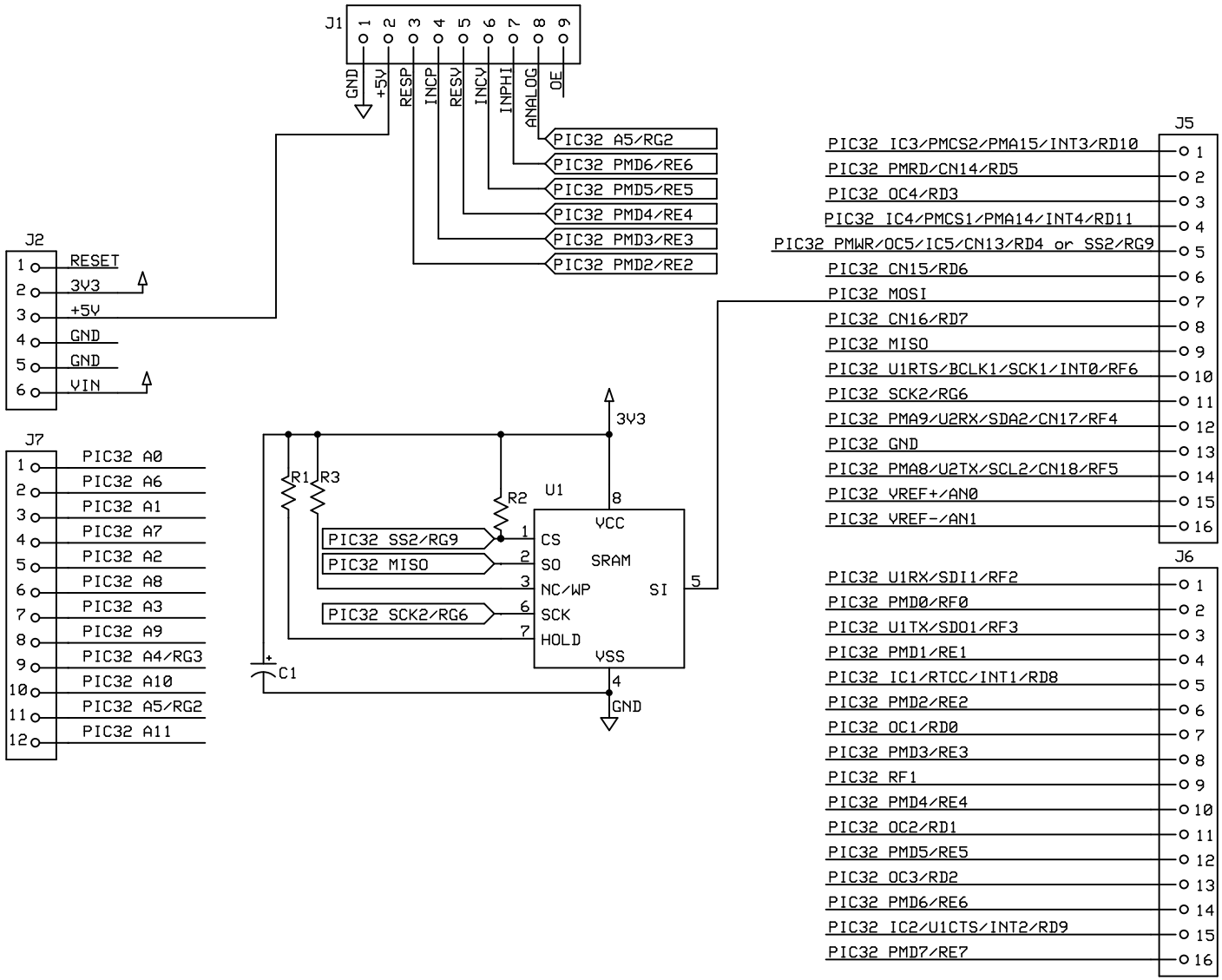

Abe Howell's Robotics		
Open-Robot Vision Board		
Abe Howell	Rev 1.0 12/30/2012	Page # 1